CITY OF COOPER CITY
BUILDING DEPARTMENT

PHONE: 954-434-4300
EXT. #230, #227,# 279
FAX: 954-680-1439

PERMIT SUBMITTAL CHECKLIST
FENCE

☐ PERMIT APPLICATION

☐ **TWO (2)** SURVEYS SHOWING LOCATION OF FENCE.INDICATE TOTAL LINEAR FOOTAGE OF FENCE,

TYPE AND HEIGHT OF FENCE AND THE VALUE OF CONSTRUCTION.

NOTE: BE ADVISED THAT IF THE FENCE IS **UNDER** FIVE FEET IN HEIGHT, IT WILL NOT MEET THE CITY ORDINANCE FOR A SWIMMING POOL BARRIER.
MESH BABY FENCES CANNOT BE USED IN LIEU OF A FENCE SURROUNDING THE PROPERTY.

☐ **TWO (2)** COPIES OF WOOD AND CHAIN LINK – SUBMIT CITY HANDOUT

☐ ALL OTHER TYPES OF FENCING REQUIRE **TWO (2)** COPIES OF A PRODUCT APPROVAL OR SEALED PLANS DESIGNED FOR 115 MPH *(3 SEC GUST)* EXP. C

☐ **TWO (2)** COPIES OF HOMEOWNERS ASSOCIATION APPROVAL. (*If applicable*)

☐ **TWO (2)** COPIES OF EASEMENT RELEASE FORMS. *(If applicable*)

☐ NOTICE OF COMMENCEMENT. (**Certified Copy or Electronic**) (*State of Florida effective January 1, 1991 requires a not commencement with the **fair market** value of **$2,500.00** or greater.*)

☐ **TWO (2)** COPIES OF THE OWNER / BUILDER AFFIDAVIT. (*If applicable*)

Rev 9/01/2015 GL

CITY OF COOPER CITY
BUILDING DEPARTMENT

PHONE: 954-434-4300
EXT. #230, #227,# 279
FAX: 954-680-1439

PERMIT SUBMITTAL CHECKLIST
FENCE

FENCE POSTS: Per the 2014 Florida Building Code with the effective date of June 30th 2015 the Following items will be required:

- ☐ FENCE POST ARE TO BE 4"X 4" WITH THE POST 2' DEEP IN CONCRETE. FOOTING 10" IN DIAMETER.
- ☐ ALL FENCE POSTS ARE TO BE PLACED ON THE INSIDE OF FENCE.
- ☐ HORIZONTAL FRAMING SHALL CONSIST OF A MINIMUM OF 3 HORIZONTAL RAILS OF A NOMINAL 2X4 MATERIALS AND ARE FASTENED ACCORDING TO SECTION 2328 OF THE FLORIDA BUILDING CODE.
- ☐ ALL FASTENERS SHALL BE CORROSION RESISTANT.
- ☐ THE REQUIRED SPACING OF POSTS ARE AS FOLLOWS:

  A. FENCES THAT ARE 6 FEET HIGH – POST ARE 4 FEET ON CENTER.

  B. FENCES THAT ARE 5 FEET HIGH – POST ARE 5 FEET ON CENTER.

  C. FENCES THAT ARE 4 FEET HIGH – POST ARE 6 FEET ON CENTER.

BROWARD COUNTY UNIFORM BUILDING PERMIT APPLICATION

Select One Trade: ☐ **Building** ☐ **Electrical** ☐ **Plumbing** ☐ **Mechanical** ☐ **Other** _____

Application Number: Application Date:

1

Job Address:			Unit:	City:
Tax Folio No.:	Flood Zn:	BFE:	Floor Area:	Job Value:
Building Use:		Construction Type:		Occupancy Group:
Present Use:		Proposed Used:		
Description of Work:				
☐ New ☐ Addition ☐ Repair ☐ Alteration ☐ Demolition ☐ Revision ☐ Other:				
Legal Description:				☐ Attachment

2

Property Owner:	Phone:	Email:
Owner's Address:	City:	State: Zip:

3

Contracting Co.:	Phone:	Email:
Company Address:	City:	State: Zip:
Qualifier's Name:	Owner-Builder: ☐	License Number:

4

Architect/Engineer's Name:	Phone:	Email:
Architect/Engineer's Address:	City:	State: Zip:
Bonding Company:		
Bonding Company Address:	City:	State: Zip:
Fee Simple Titleholder's name (if other than owner):		
Fee Simple Titleholder's Address (If other than owner):	City:	State: Zip:
Mortgage Lender's Name:		
Mortgage Lender's Address:	City:	State: Zip:

Application is hereby made to obtain a permit to do the work and installations as indicated. I certify that no work or installation has commenced prior to the issuance of a permit and that all work will be performed to meet the standards of all laws regulating construction in this jurisdiction. I understand that a separate permit must be secured for ELECTRICAL WORK, PLUMBING, SIGNS, WELLS, POOLS, FURNACES, BOILERS, HEATERS, TANKS, and AIR CONDITIONERS, etc.

OWNER'S AFFIDAVIT: I certify that all the foregoing information is accurate and that all work will be done in compliance with all applicable laws regulating construction and zoning.

WARNING TO OWNER: YOUR FAILURE TO RECORD A NOTICE OF COMMENCEMENT MAY RESULT IN YOUR PAYING TWICE FOR IMPROVEMENTS TO YOUR PROPERTY. A NOTICE OF COMMENCEMENT MUST BE RECORDED AND POSTED ON THE JOB SITE BEFORE THE FIRST INSPECTION. IF YOU INTEND TO OBTAIN FINANCING, CONSULT WITH YOUR LENDER OR AN ATTORNEY BEFORE COMMENCING WORK OR RECORDING YOUR NOTICE OF COMMENCEMENT.

X_____
Signature of Property Owner or Agent

STATE OF FLORIDA
COUNTY OF BROWARD

Sworn to (or affirmed) and subscribed before me this_____ day of _____, 20_____ by

_____
(Type / Print Property Owner or Agent Name)

_____
NOTARY'S SIGNATURE as to Owner or Agent's Signature

Notary Name _____
(Print, Type or Stamp Notary's Name)

Personally Known ____ or Produced Identification _____

Type of Identification Produced _____

X_____
Signature of Qualifier

STATE OF FLORIDA
COUNTY OF BROWARD

Sworn to (or affirmed) and subscribed before me this_____ day of _____, 20_____ by

_____
(Type / Print Qualifier's Name)

_____
NOTARY'S SIGNATURE as to Qualifier's Signature

Notary Name _____
(Print, Type or Stamp Notary's Name)

Personally Known ____ or Produced Identification _____

Type of Identification Produced _____

APPROVED BY: _____ Permit Officer Issue Date: _____ Code in Effect: _____

A jurisdiction may use a supplemental page requesting additional information and citing other conditions, please inquire.

Note: If any development work as described in FS 380.04 Sec. 2 a-g is to be performed, a development permit must be obtained prior to the issuance of a building permit.

THE CITY OF COOPER CITY BROWARD COUNTY, FLORIDA

Someplace Special

P.O. BOX 290910
9090 Southwest 50th Place
Cooper City, Florida 33329-0910
(954) 434-4300 Ext#230 • Fax (954) 680-1439
www.coopercityfl.org

PERMIT NUMBER:

PLAN REVIEW NUMBER:

TYPE	FEE	ADDTL FEES
PERMIT		
EDUCATION		
COUNTY		
BCPSF		
TECH FEE		
BOND		
PARKS		
PUBLIC SAFETY		
PUBLIC BLDGS		
FIRE		
ADDTL PERMIT FEES		
SUB TOTAL		
NOTARY FEE		
TOTAL		
INVOICE #		
RECEIPT #		

OFFICE USE ONLY				
DIVISION	APPROVED	DATE	REJECT	DATE
STRUCTURAL				
ELECTRICAL				
PLUMBING				
MECHANICAL				
UTILITES/ENGIN				
FIRE				
ZONING				

NOTICE: IN ADDITION TO THE REQUIREMENTS OF THIS PERMIT, **THERE MAY BE ADDITIONAL RESTRICTIONS APPLICABLE** TO THIS PROPERTY THAT MAY BE FOUND IN THE PUBLIC RECORDS OF THIS COUNTY AND **THERE MAY BE ADDITIONAL PERMITS REQUIRED FROM OTHER GOVERMENT ENTITIES** SUCH AS WATER MANAGEMENT DISTRICTS,STATE AGENCIES OR FEDERAL AGENCIES.

THE ISSUANCE OF A BUILDING PERMIT DOES NOT GIVE YOU PERMISSION TO VIOLATE DEED RESTRICTION AND/OR HOMEOWNER'S REGULATIONS. PLEASE CHECK DEED RESTRICTIONS BEFORE COMMENCING ANY CONSTRUCTION

OWNER'S AFFIDAVIT: I CERTIFY THAT ALL FOREGOING INFORMATION IS ACCURATE AND THAT ALL WORK WILL BE DONE IN COMPLIANCE WITH ALL APPLICABLE LAWS REGULATING CONSTRUCTION AND ZONING. FURTHERMORE, I AUTHORIZISE THE ABOVE NAMED CONTRACTOR TO DO THE WORK STATED.

NOTICE OF COMMENCEMENT, CLERK OF COURTS, BROWARD COUNTY GOVERNMENTAL CENTER
RECORDING SECTION. ROOM 114. 115 S. ANDREWS AVENUE. FORT LAUDERDALE. FL 33302 PHONE: 954-357-7283

URBAN PLANNING AND REDEVELOPMENT DEPARTMENT (D.P.E.P)
WWW.BROWARD.ORG/DEVELOPMENT
STATE OF FLORIDA DIVISION OF HOTELS AND RESTAURANT
PHONE: 954-956-5692

FLORIDA BUILDING CODE 2014

Wood Fences

Section 4403.2.1 Fences. Fences not exceeding 6'-0" in height from grade may be designed for 75 mph (33 m/s) fastest mile wind speed or 90 mph (40 m/s) 3-second gust.

Section 4409.15.2 Wood fences. Wood fence design shall be as specified by 4409.15.2

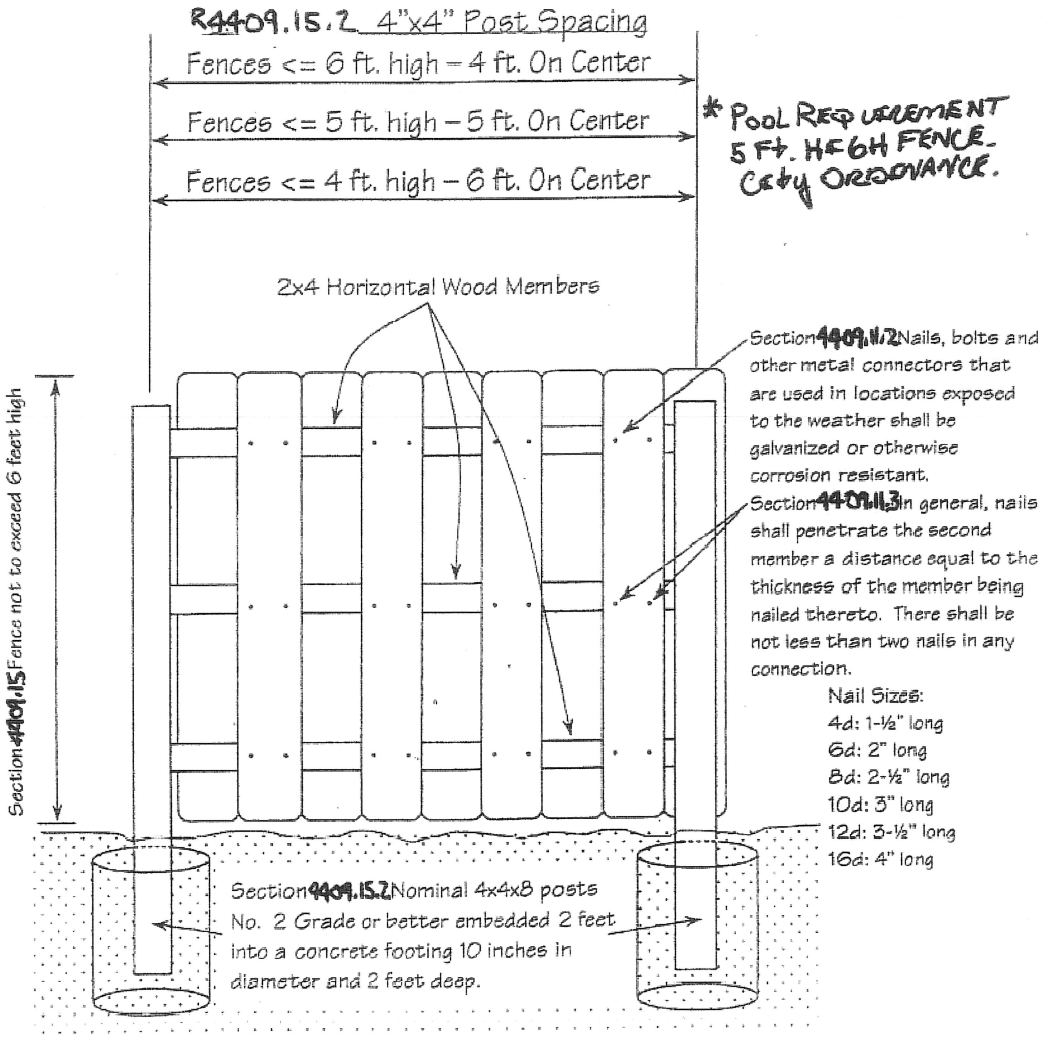

Section 4409.13.2.2 All posts, poles and columns embedded in concrete which is in contact with ground and supporting permanent structures shall be approved pressure treated wood suitable for ground contact use except naturally durable wood may be used for posts, poles and columns embedded in concrete for structures other than buildings and walking surfaces or in structures where wood is above ground level and not exposed to the weather.

Section 4409.13.2.6 The expression "naturally durable wood" refers to the heartwood of the following species:

Decay resistant: Redwood, Cedars, Black Locust.

Termite Resistant: Redwood, Bald and Eastern Red Cedar.

CITY OF COOPER CITY
FENCE
PERMIT SUBMITTAL CHECKLIST

FENCE PLACEMENT:

- ☐ Within owner's property.
- ☐ No Fence within front setback nor within street right of-way.
- ☐ Maximum 6' in height unless specifically allowed by code.
- ☐ Corner lots require review of corner for placement.

VERTICAL SHADOW BOX FENCE:

☐

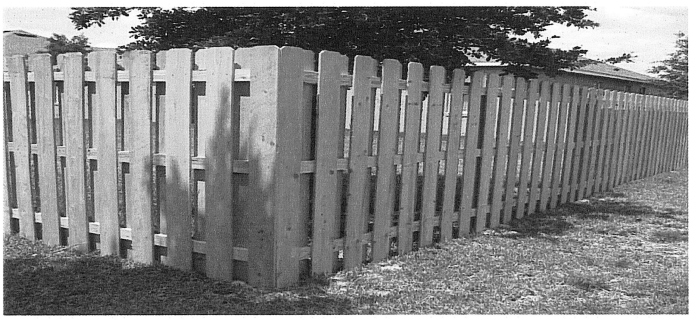

This is the only type of fence permitted along public right-of-way, double frontage lots and also permitted on interior property lines.

GOOD SIDE FACING OUT.

STOCKADE FENCE:

☐

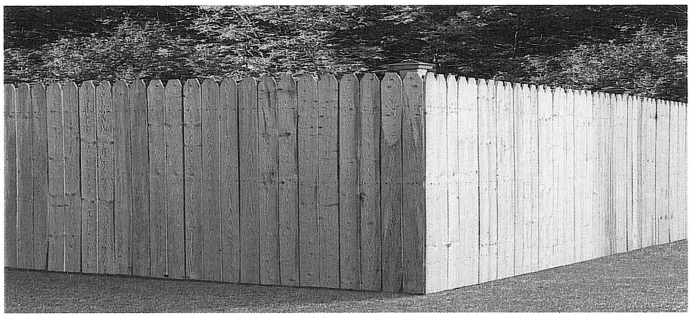

This type of fence permitted on interior property lines.

GOOD SIDE FACING OUT.

BOARD ON BOARD FENCE:

☐

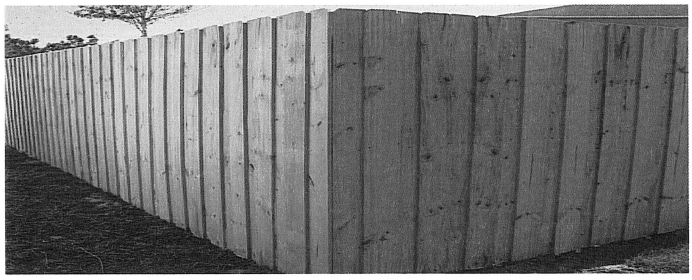

This type of fence permitted on interior property lines.

GOOD SIDE FACING OUT.

1/25/2016

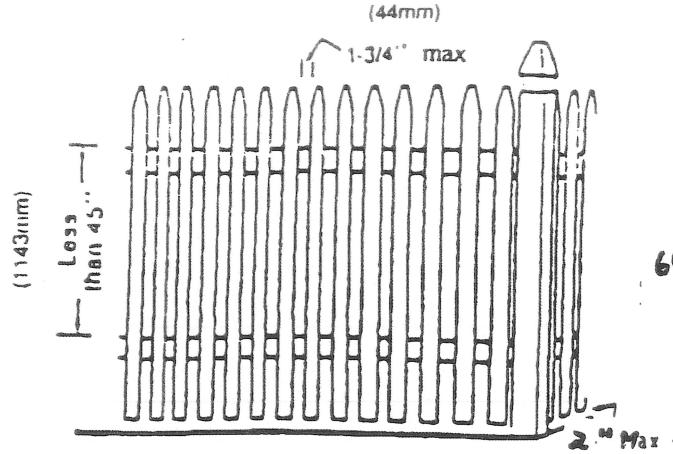

FIG. A IF HORIZONTAL MEMBERS ARE LESS THAN 45" APART, THE SPACE BETWEEN VERTICAL MEMBERS SHALL NOT EXCEED 1-3/4".

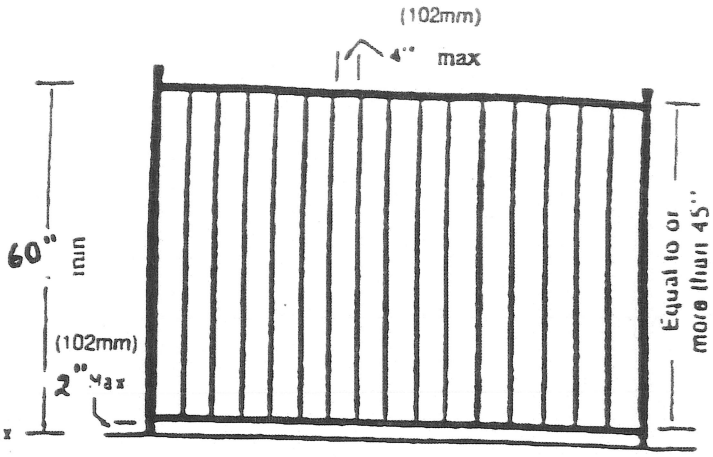

FIG. B IF HORIZONTAL MEMBERS ARE EQUAL TO OR MORE THAN 45" APART, THE SPACE BETWEEN VERTICAL MEMBERS SHALL NOT EXCEED 4".

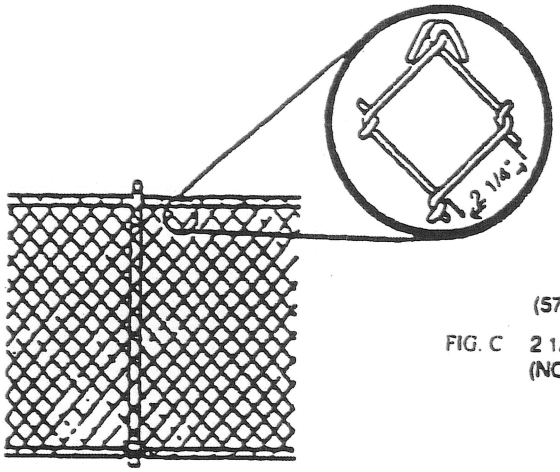

(57mm)

FIG. C 2 1/4" SQUARE CHAIN LINK MESH. (NOMINAL)

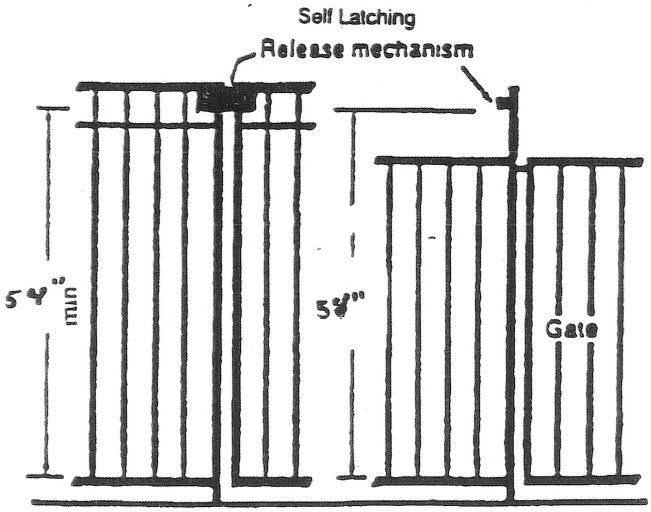

RELEASE MECHANISM LOCATED AT 54" OR HIGHER FROM THE BOTTOM OF THE GATE.

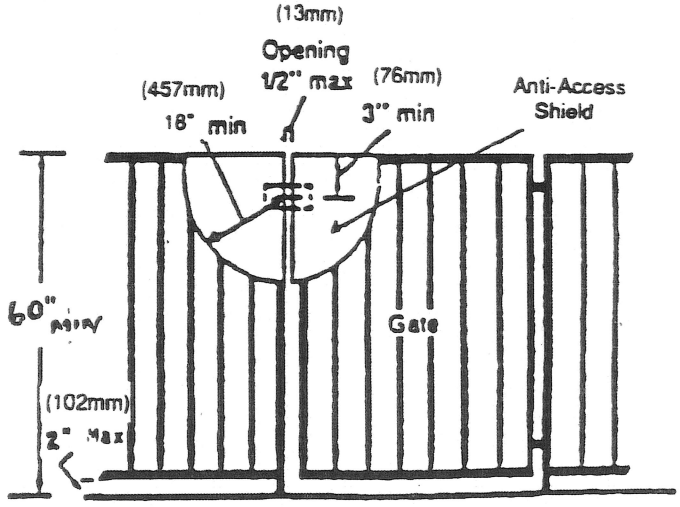

RELEASE MECHANISM LOCATED LESS THAN 54" FROM THE BOTTOM OF THE GATE.

FIG. D LATCH RELEASE MECHANISM.

ANSI/NSPI - 5/95 SEC III
COOPER CITY ORD.
POOL AREAS

certification shall be provided to the structural engineer of record and/or the architect of record, the special inspector and the building department prior to the issuance of the certificate of occupancy.

2223.11.4 Structural construction documents demonstrating compliance with this code shall be reviewed and approved by the special inspector prior to the issuance of a certificate of occupancy.

SECTION 2224
HIGH-VELOCITY HURRICANE ZONES—CHAIN LINK FENCES

2224.1 Chain link fences in excess of 12 feet (3.7 m) in height shall be designed according to the loads specified in Chapter 16 (High-Velocity Hurricane Zones).

2224.2 Chain link fences less than 12 feet (3.7 m) in height shall be designed according to the loads specified in Chapter 16 (High-Velocity Hurricane Zones) or may be constructed to meet the minimum requirements specified in Table 2224.

TABLE 2224
CHAIN LINK FENCE MINIMUM REQUIREMENTS

Fence Height (ft)	Terminal Post Dimensions (in inches) (o.d. x wall thickness)	Line Post Dimensions (o.d. x wall thickness) (in inches)	Terminal Post Concrete Foundation Size (diameter x depth) (in inches)	Line Post Concrete Foundation Size (diameter x depth) (in inches)
Up to 4	2 3/8 x 0.042	1 5/8 x 0.047	10 x 24	8 x 24
Over 4 to 5	2 3/8 x 0.042	1 7/8 x 0.055	10 x 24	8 x 24
Over 5 to 6	2 3/8 x 0.042	1 7/8 x 0.065	10 x 24	8 x 24
Over 6 to 8	2 3/8 x 0.110	2 3/8 x 0.095	10 x 36	10 x 36
Over 8 to 10	2 7/8 x 0.110	2 3/8 x 0.130	12 x 40	10 x 40
Over 10 to 12	2 7/8 x 0.160	2 7/8 x 0.120	12 x 42	12 x 42

For SI: 1 inch = 25.4 mm.

NOTES:

1. This table is applicable only to fences with unrestricted airflow.
2. Fabric: $12^1/_2$ gauge minimum.
3. Tension bands: Use one less than the height of the fence in feet evenly spaced.
4. Fabric ties: Must be minimum the same gauge of the fabric.
5. Fabric tie spacing on the top rail: Five ties between posts, evenly spaced.
6. Fabric tie spacing on line posts: One less than height of the fence in feet, evenly spaced.
7. Either top rail or top tension wire shall be used.
8. Braces must be used at terminal posts if top tension wire is used instead of top rail.
9. Post spacing: 10 foot (3 m) on center maximum.
10. Posts shall be embedded to within 6 inches (152 mm) from the bottom of the foundation.
11. In order to follow the contour of the land, the bottom of the fence may clear the contour of the ground by up to 5 inches (127 mm) without increasing table values to the next higher limit.